| IT | NAME | MATERIAL | REMARK |
|---|---|---|---|
| 1 | BODY | PVC | |
| 2 | EARTH WIRE | PVC | 1.25s |
| 3 | CONTACT BLADE | C2680RC-1/2H | |
| 4 | EARTH CONTACT | C5191R-1/2H | |
| 5 | 先開端子 | C2680RC-1/2H | |

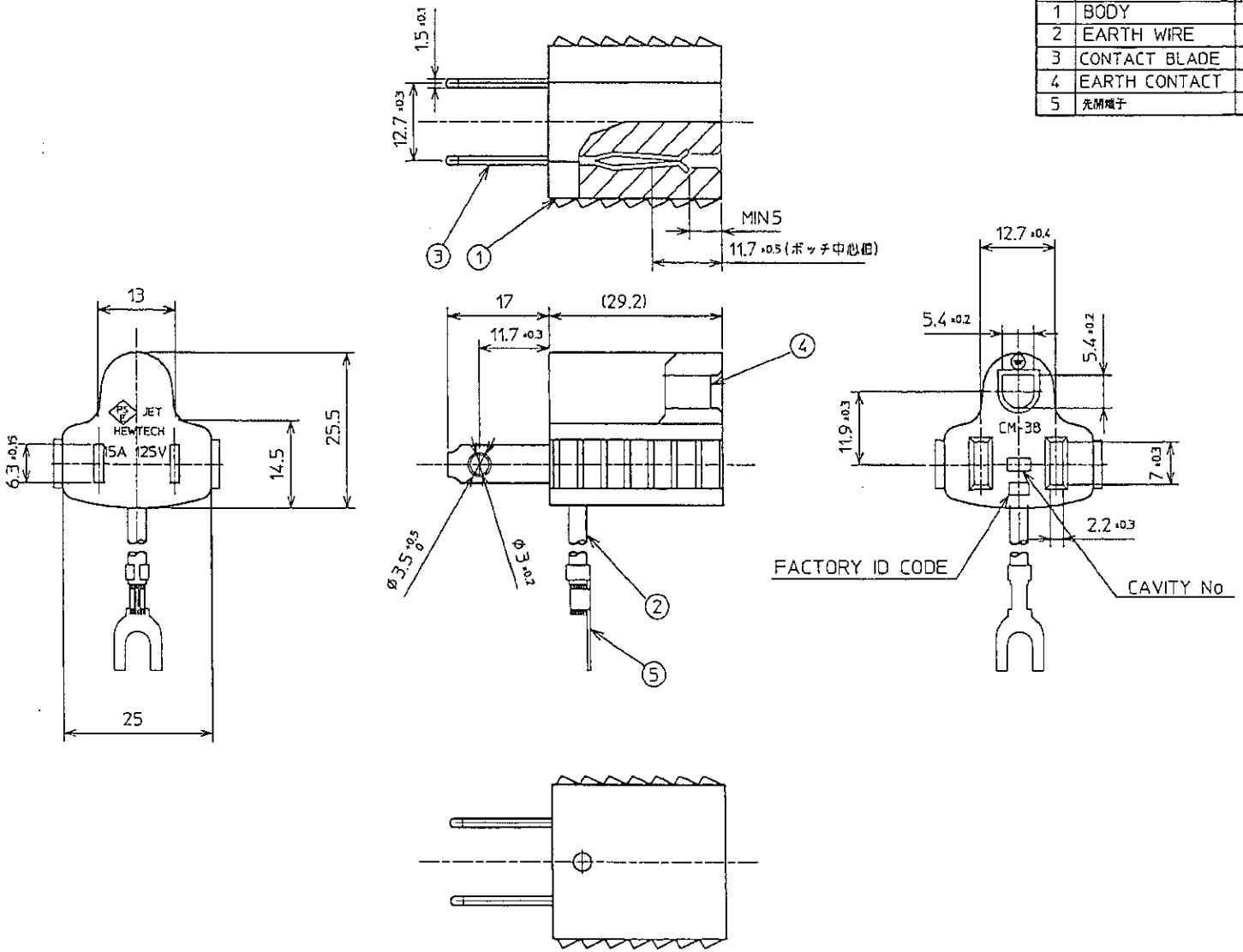


| LET | REVISION | DATE | SIGN |
|---|---|---|---|
| △X | | | |
| △X | | | |
| △X | | | |
| △X | | | |

Hewtech
HIRAKAWA HEWTECH CORP.

| TOLERANCE | |
|---|---|
| DIMENSION | TOL. |
| L≦ 4 | ±0.2 |
| 4<L≦ 16 | ±0.3 |
| 16<L≦ 63 | ±0.4 |
| 63<L | ±0.5 |

| | | | |
|---|---|---|---|
| ANGLE | | SCALE 1.5:1 | UNIT mm |
| DR. | K.Morishita | DATE | Dec.16'02 |
| CH. | I. Igarashi | DATE | Dec.18.02 |
| APP. | H. Inabunaga | DATE | Dec. 18. 02 |

| | |
|---|---|
| NAME | 交換プラグ(CM-38) |
| PART NO. | C-005A |
| DRAWING NO. | PCC140CA |

E-050-99