IT	NAME	MATERIAL	REMARK
1	CORD	SVT 3X18AWG	φ6.5
2	BODY	PVC(95°)	
3	CONTACT BLADE	C2680RC-1/2H MBNI	A-323
4	EARTH PIN	C2680RC-1/2H MBNI	A-245C

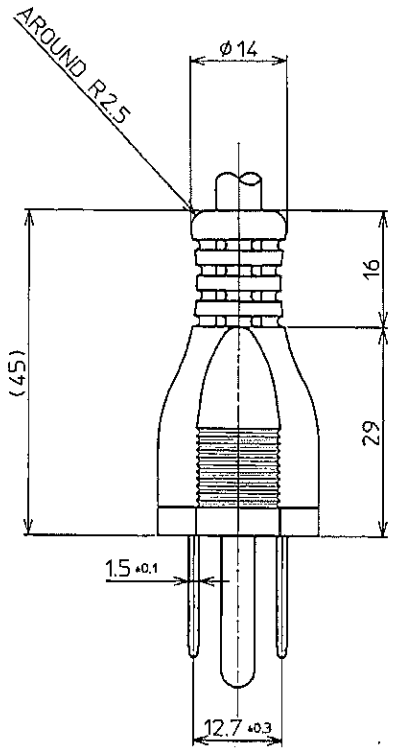

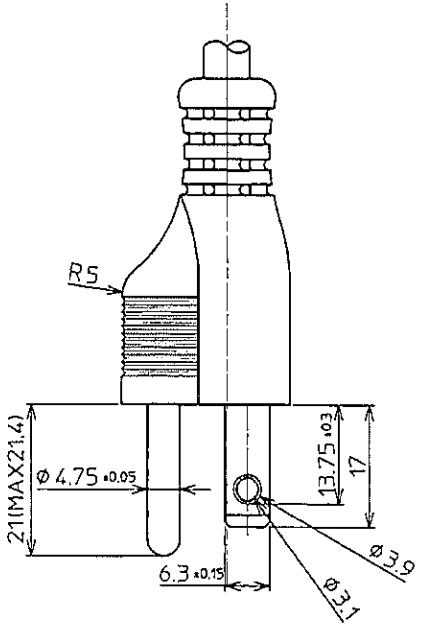

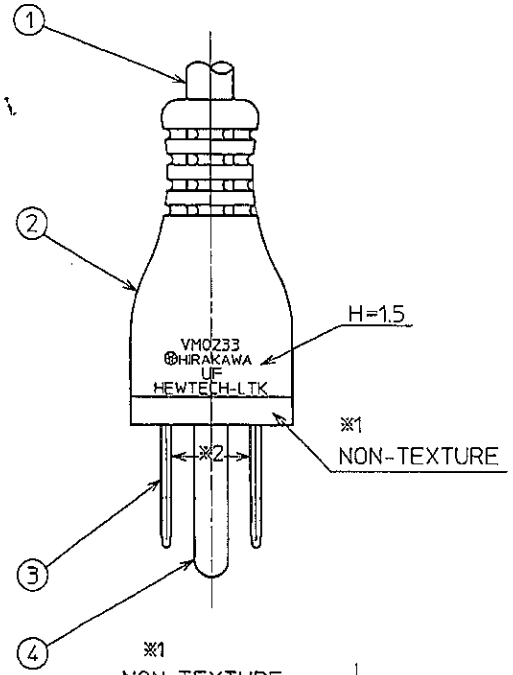

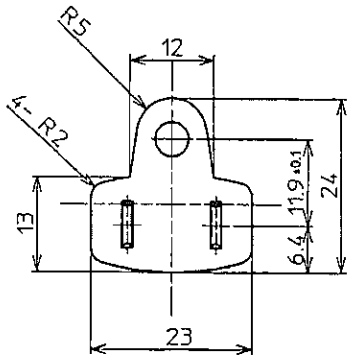

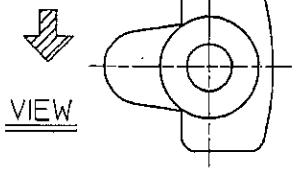

NOTE
※1. Texture of all main surfaces to be "B-39BC(MIYAMORI)unless otherwise specified.
※2. Markings on the blades(inside blades)

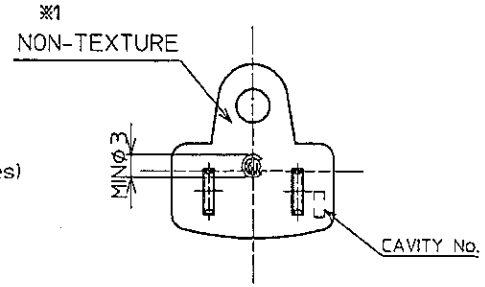

LET	REVISION	DATE	SIGN
△X			
△X			
△X			
△X	再トレース		

HEWTECH-LTK

HIRAKAWA HEWTECH CORP.

TOLERANCE	
DIMENSION	TOL.
L≤ 63	±0.5

ANGLE		SCALE 1.5 : 1	UNIT mm
DR.	T.Aizawa	DATE	Jan.14'98
CH.	I. Igarashi	DATE	Jan.14.98
APP.	T. Katsu	DATE	Jan.14.98

NAME	3P-PLUG
PART NO.	VM02330-AA
DRAWING NO.	MC0064CA

※A151-00